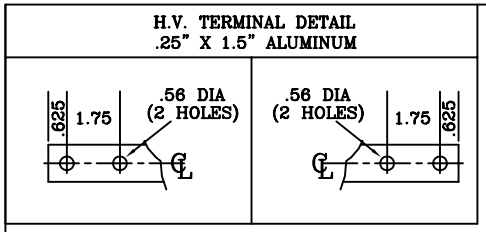

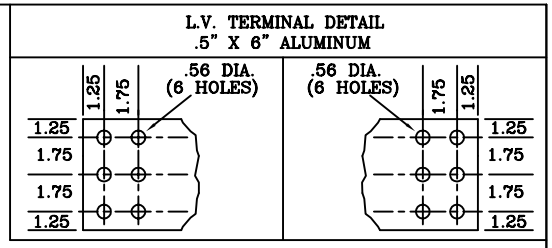

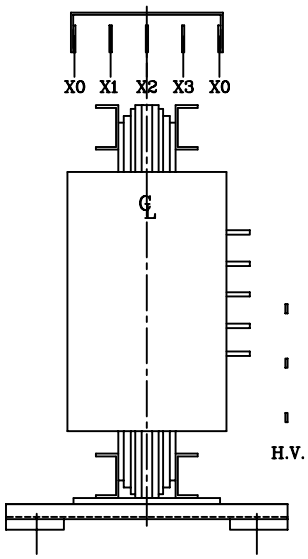

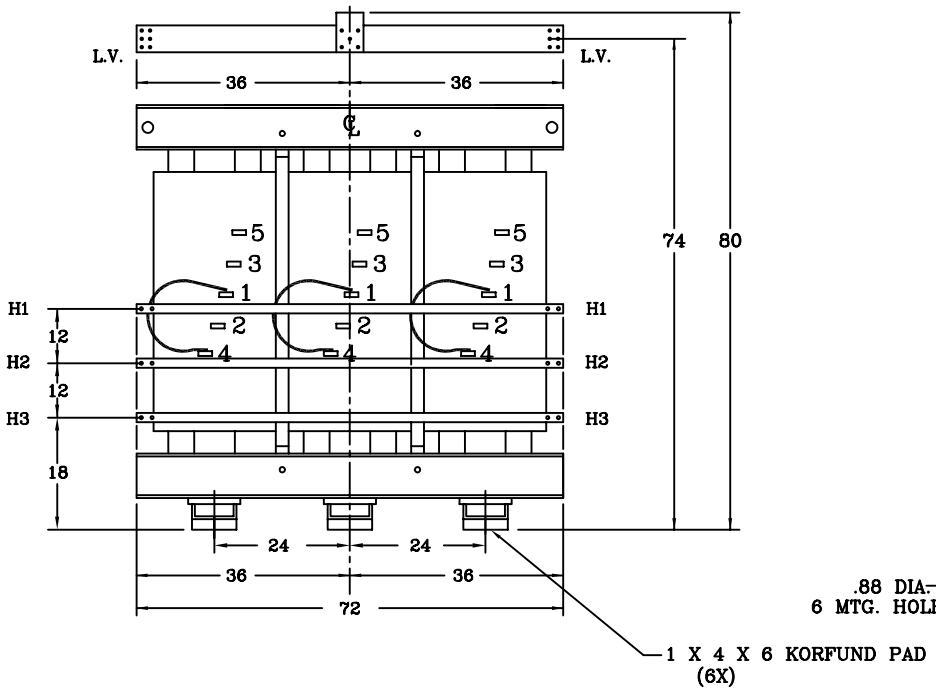

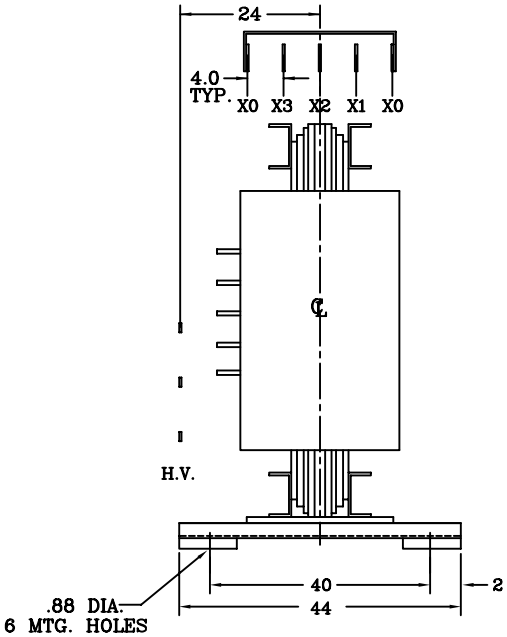

* – DESIGN IMPEDANCE = 5.75%

SUNBELT TRANSFORMER

DRY TYPE TRANSFORMER CLASS AA

KVA	2500	3 PHASE	HERTZ	60	%IZ	*	°C RISE	150°C
H.V.	4160 Δ	30 KV BIL	AMPS	347	WGT.	8500		LBS.
L.V.	480Y/277	10 KV BIL	AMPS	3007	NO.	A61505		

H.V. TAP	VOLTS
1–2	4368
2–3	4264
1–4	4160
3–4	4056
3–6	
4–5	3952
5–6	

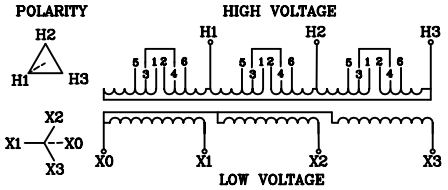

DE-ENERGIZE TRANSFORMER BEFORE CHANGING TAPS NP-310

SPECIFICATIONS

1) ALUMINUM WOUND
2) 220°C INSULATION
3) VACUUM PRESSURE IMPREGNATION
4) REMOVABLE MOUNTING FEET

1) REDUCED OVERALL HEIGHT AND REVISED H.V. & L.V. BUS EXTENSION DIMENSIONS. 2/02/05 BRP

36961-A

SUNBELT transformer TEMPLE, TX SHARON, PA BAKERSFIELD, CA 1-800-433-3128

TITLE: DRY TYPE TRANSFORMER SPECIFICATIONS AND DIMENSIONAL DATA

DRAWN BY: BRP

DATE: 1/14/05

CUSTOMER:

DRAWING NO.: A61505