NO. SKBB102003.002

THREE PHASE TRANSFORMER

SUNBELT

SUNBELT TRANSFORMER

TEMPLE, TEXAS

KVA 225 1.8 %IMP BIL HV 60 LV 30 KV

HV 4160 LV 480Y/277 AMPS 270

WT LB TANK 963 C&C 983 TYPE II OIL 1186 LBS 158 GAL TOTAL 3132 LBS

CONT 65 °C RISE CLASS ONAN 60HZ
TANK DESIGNED FOR +7 PSIG
F1 ISOLATION LINK
F2 BAYONET FUSE

CONTAINS NO DETECTABLE LEVEL OF PCB (LESS THAN 2 PPM) AT THE TIME OF MANUFACTURE.

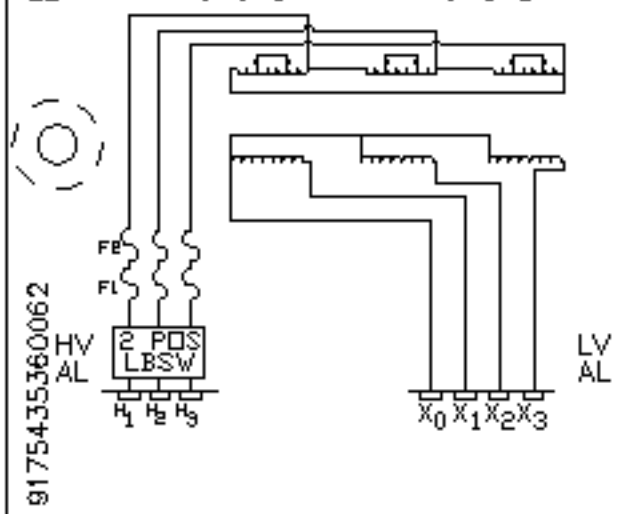

VOLTAGE	POS	AMPS
4368	1/A	29.74
4264	2/B	30.47
4160	3/C	31.23
4056	4/D	32.03
3952	5/E	32.87

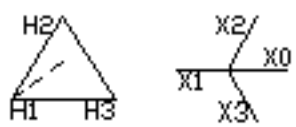

9175435360062

BLACK ANNODIZED ALUMINUM

REV	DATE	REVISION	BY	APP

SUNBELT TRANSFORMER
TEMPLE, TEXAS

NAME: LASER NAME PLATE		CC	857
DESCR: RF/TP/2FUSE/2PLB/ D-Y			
ID 3BLBKY36	P.N. SKBB102003.002		
SCALE 1.000	DWG BY BB	CHK BY	DATE 10/17/03

CAT. NO. 9175435360062

3BLBKY36